WWW.CORONALIGHTING.COM

ARCHITECTURAL GRADE SERIES

# SPECIFICATION SHEET

## PRODUCT # : CL-328-SS

•Well Lights •Stainless Steel

## Fixture Specifications:

**Housing:** Steel faceplate fitted onto aluminum housing, mounted inside a PVC sleeve, providing in-ground fixture support.

**Faceplate:** Stainless Steel faceplate, designed to recess into installed floor.

**Finish:** **SS-Stainless Steel**. PVC is available in black only.

**Lens:** Clear, tempered, and heat resistant glass.

**Socket:** Top grade ceramic bi-pin socket with retention clip.

**Lamp:** 12V, MR-16 halogen 35W max. L-BAB-C20 (20w) standard. LED lamps are also available. See lamp guide, below for more information.

**Gasket:** Silicone “0” ring seals faceplate to housing providing weather tight protection.

**Wiring:** Fixture is prewired with a 3ft 18-2 SJT-W direct burial cord. Wire connector sold seperately. Universal connector (**CX-839**) or silicone filled wire nut (**CX-854**) is available from Corona Lighting.

**Mounting:** In-ground direct burial, or concrete encasement,. including in-out compartments for multiple connection of fixtures. Faceplate recessed to installed floor.

**Electrical Notes:** A remote 12V transformer is required. Options are available from Corona Lighting.
Voltage range for 12V halogen lamps are 11V-12.5V
Voltage range for LED lamps are 10V-17V.
Proper grease/lubricant is suggested on threaded parts during installation process.

**Warranty:** Limited lifetime warranty on faceplate and one (1) year warranty on housing against manufacturer’s defects.

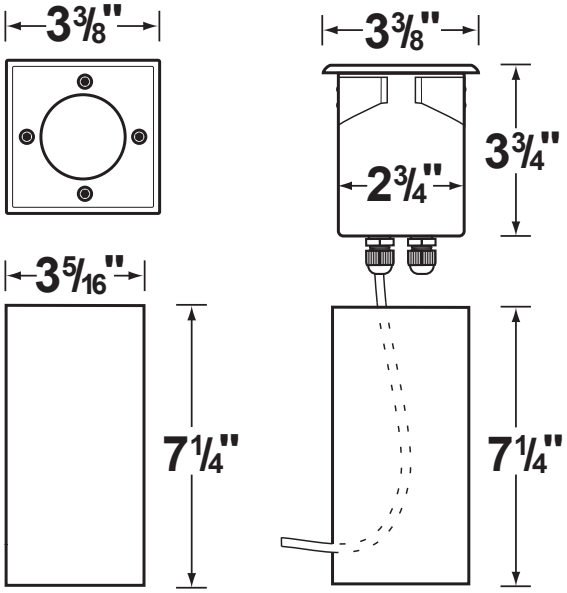


**JOB INFORMATION**

**TYPE:** **DATE:**

**JOB NAME & ADDRESS:**

**PRODUCT #:**

**TOTAL QUANTITY:**

**LAMP TYPE & WATTAGE:**

**TRANSFORMER:**

**CONTRACTOR:**

**SPECIFIER:**

• When ordering LED lamp with a fixture your part number should follow the format below:

• Corona Lighting reserves the right to make any change and/or improvement to the design and construction of this fixure without further notification.