EnVisionLED™ LED Wall Pack

c UL us
LISTED
E495046

NAME: LED Wall Pack Light

P/N : LED-WPM-20W-TRI-F-BZ-PC

Note:
20W = Rating Power
X = LED manufacturer
F = Cover type, frosted cover
A1 = Version number
a = Housing colors, can be WH=White, BH=Black, BR=Brown
b= Photocell, can be P or blank
c= CCT,2700K-6500K

Advantage:

- UL cUL certificate
- Internal driver,
  Input voltage 100-277VAC
- No UV or IR in the beam
- Easy to install and operate
- Energy saving, long lifespan
- Instant start, NO humming
- Green and eco-friendly without mercury.

Dimensions

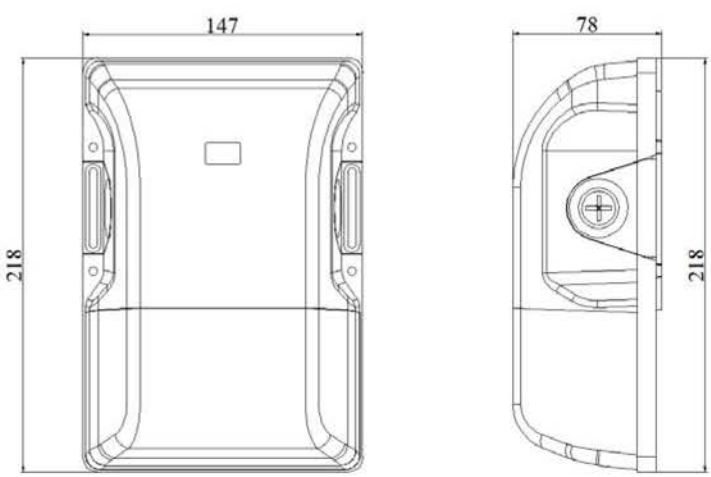

Application:

- entrance lighting，courtyard lighting
- Industrial lighting，Outdoor landscape lighting;
- Building,The hotel;
- Wall lighting area and so on.

LED Wall Pack

Specifications

OPTICAL	Input Power	20W
	Lumen	2460-2860LM
	Lumen Efficacy	123-143lm/W
	Color Temperature	2700-6500K
	CRI	>80
	Viewing Angle	100°
ELECTRICAL	Input Voltage	100-277VAC 50/60Hz
	PF	≥0.9
	THD	≤20%
	Driver Model	China Brand Driver
MATERIALS	LED Type	SMD2835 (0.5W)
	LED QTY	40*2PCS
	Housing	Aluminum(ADC12) +PC
	Housing Color	Black/Brown/White/Customized
	Cover	Stripe lens
	Waterproof Rating	WET（IP65）
	Optional Accessory	Photocell (Option)
OTHERS	Operating Temperature	-20℃ TO 45℃
	Operating Humidity	20%-90% RH
	Storage Temperature	-30℃ TO 80℃
	Storage Humidity	10%-95% RH
	Warranty Time	5 Years

Package

Lamps Net Weight: 0.9kg / pcs

	Size	Qty/Carton	Weight/Carton
Outer box	460 X 325 X 245 mm	10	9.5 kg
Inner box	154 X 88 X 225 mm	1	0.9 Kg

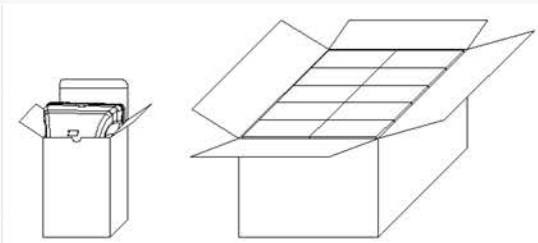

Light Distribution Testing Parameters

Filename: LED-WPM-20W-TRI-F-BZ-PC-ab45-100
Manufacturer: ENVISION LED LIGHTING CO. LTD
Luminaire: LED-MWP03B-20W-ab45
Lamp Output: 1 lamp, rated Lumens/lamp: 2925.9
Max Candela: 1,144.9 at Horizontal: 0°, Vertical: 27°
Input Wattage: 19.9
Luminous Opening: Point
Test Lab: Belling Test Laboratory Co., LTD
Photometry : Type C
Nema Type: 7 X 7

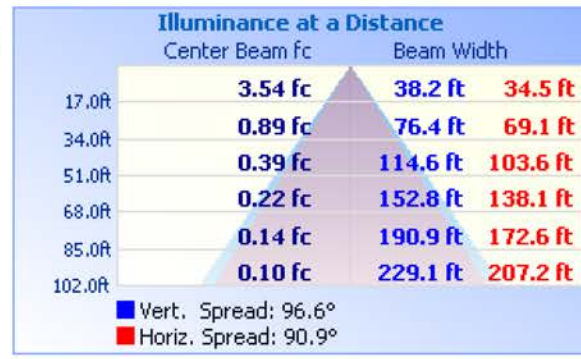

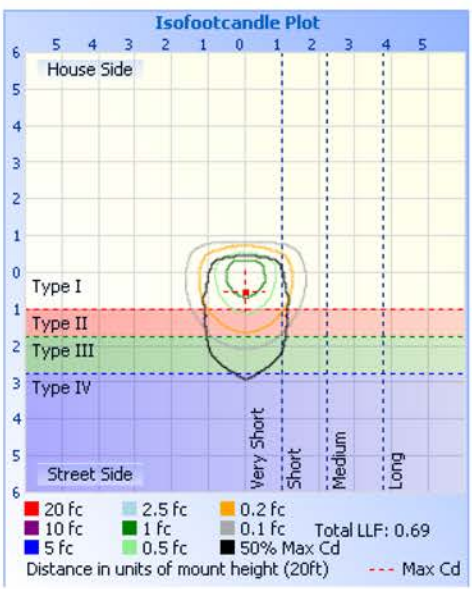

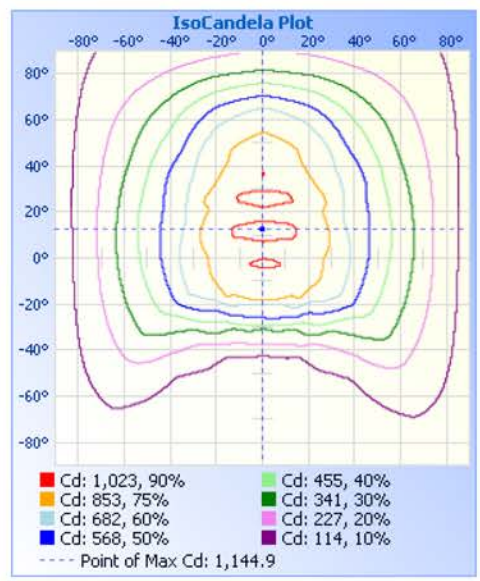

Notice For User

- Please turn off power before install or change assembly parts.
- The input voltage and lamps should be matched, after connecting the power line, Please make sure the wiring section is insulated.
- No-professionals, must not install and disassemble the lamps.

Trouble Shootings

Troubles	Check points
Flickering of the light	Turn off the power and turn on again in 3 minutes. If same phenomena occur, then call agencies
Out of working	Please check the connection